Hangzhou Multi-Color Optoelectronics Co., Ltd
**Address:** No. 300, The 10th Avenue, East HETZ, Hangzhou, China
**Tel:** 0571-86708389 **Fax:** 0571-86708340 **Web:** www.mc-oe.com



# MULTI-COLOR

# SPECIFICATION FOR BLUE LED

## MC-LB346HIBK

- Size(mm): 3.2×3.9×6.1
- RoHS Compliant
- High reliability
- High anti-oxidation
- Good UV resistance performance
- Pb-free Reflow soldering Application

# 1. SPECIFICATIONS

## 1.1 Absolute Maximum Ratings (Ta=25°C)

| Item | Symbol | Absolute Maximum Rating | Unit |
|---|---|---|---|
| Forward Current | $I_F$ | 30 | mA |
| Pulse Forward Current | $I_{FP}$ | 100 | mA |
| Reverse Voltage | $V_R$ | 5 | V |
| Power dissipation | $P_D$ | 99.6 | mW |
| Operating Temperature | $T_{opr}$ | -30 to +85 | °C |
| Storage Temperature | $T_{stg}$ | -40 to +100 | °C |

* $I_{FP}$ conditions with pulse width ≤10ms and duty cycle ≤10%.

## 1.2 Optical and Electrical Characteristics (Ta=25°C)

| Item | Symbol | Condition | Typ. | Min. | Max. | Unit |
|---|---|---|---|---|---|---|
| Forward Voltage | VF | IF=20mA | 3.2 | 2.75 | 3.45 | V |
| Reverse Current | IR | VR=5V | | - | 1 | μA |
| Wavelength | λD | IF=20mA | 469 | 466 | 469 | nm |
| | | | | 469 | 472 | |
| Luminous Intensity | Iv | IF=20mA | 600 | 500 | 550 | mcd |
| | | | | 550 | 600 | |
| | | | | 600 | 650 | |

* Each Bin: $I_V$(Max):$I_V$(Min) ≤1.1.

* Tolerance of measurements of the Forward Voltage is ±0.05V.

* Tolerance of measurements of the Luminous Intensity is ±5%.

* Tolerance of measurements of the Wavelength is ±0.5nm.

# 2. RELIABILITY

## 2.1 Test Items and Results

| Test Item | Standard Test Method | Test Conditions | Test Duration | Units Failed/Tested |
|---|---|---|---|---|
| Resistance to Soldering Heat | JEITA ED-4701 300 302 | Tsld=260±5°C,10sec,1dip 3mm from the base of the lens | | 0/100 |
| Temperature Cycle | | -40°C～130°C 30min. 30min. 60min./cycle | 100cycles | 0/100 |
| Temperature Cycle | JEITA ED-4701 100 105 | -40°C～25°C～100°C～25°C 30min. 5min. 30min. 5min | 100cycles | 0/100 |
| Moisture Resistance (Cyclic) | JEITA ED-4701 200 203 | 25°C～65°C～-10°C 90%RH, 24hr per cycle | 10cycles | 0/100 |
| Terminal Bending Strength | JEITA ED-4701 400 401 | 5N,0°～90°～0°bend, 2bending cycles | No noticeable damage | 0/50 |
| Terminal Pull Strength | JEITA ED-4701 400 401 | 10N,10±1sec | No noticeable damage | 0/50 |
| High Temperature Storage | JEITA ED-4701 200 201 | Ta=100°C | 1000hrs | 0/100 |
| Temperature Humidity Storage | | Ta=85°C,RH=85% | 1000hrs | 0/100 |
| Low Temperature Storage | JEITA ED-4701 200 202 | Ta=-40°C | 1000hrs | 0/100 |
| Room Temperature Operating Life | | Ta=25°C, $I_F$=30mA | 1000hrs | 0/10 |
| Temperature Humidity Operating Life | | 85°C,RH=85%, $I_F$=30mA | 500hrs | 0/10 |
| Low Temperature Operating Life | | Ta=-30°C, $I_F$=30mA | 1000hrs | 0/10 |

NOTES:

Measurements are performed after allowing the LEDs to return to room temperature.

## 2.2 Criteria for Judging Damage

| Item | Symbol | Test Conditions | Criteria for Judgement | |
|---|---|---|---|---|
| | | | Min. | Max. |
| Forward Voltage | $V_F$ | $I_F$=20mA | -- | U.S.L.×1.1 |
| Reverse Current | $I_R$ | $V_R$=5V | -- | U.S.L.×2.0 |
| Luminous Intensity | $I_V$ | $I_F$=20mA | L.S.L. ×0.9 | -- |

U.S.L.: Upper Standard Level L.S.L.: Lower Standard Level

## 3. TYPICAL ELECTRICAL CHARACTERISTICS CURVES

All characteristics shown are for reference only and are not guaranteed.

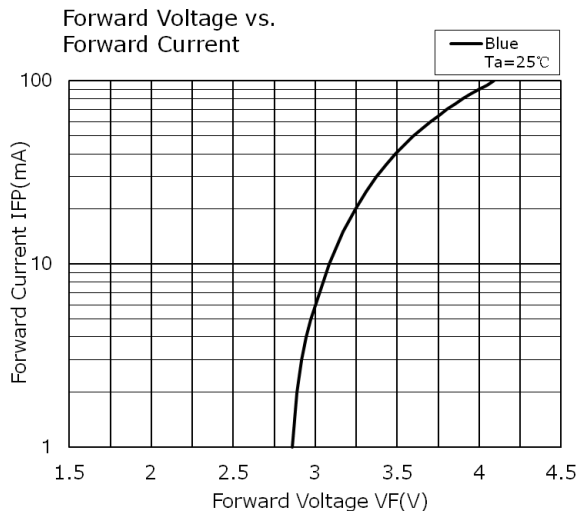


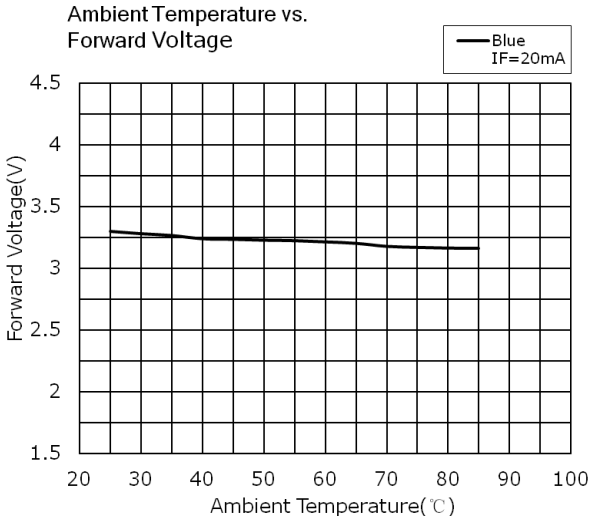


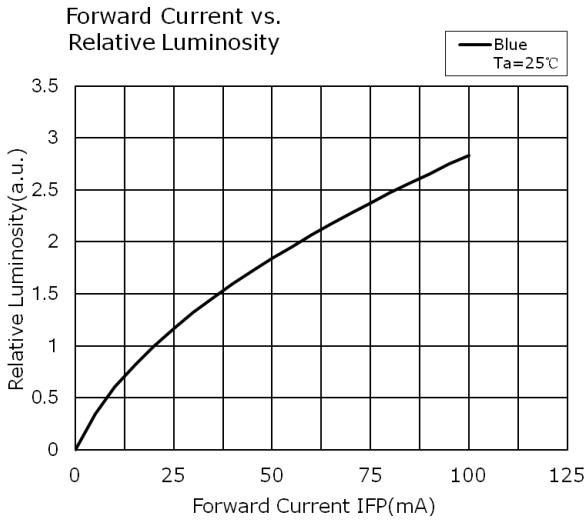


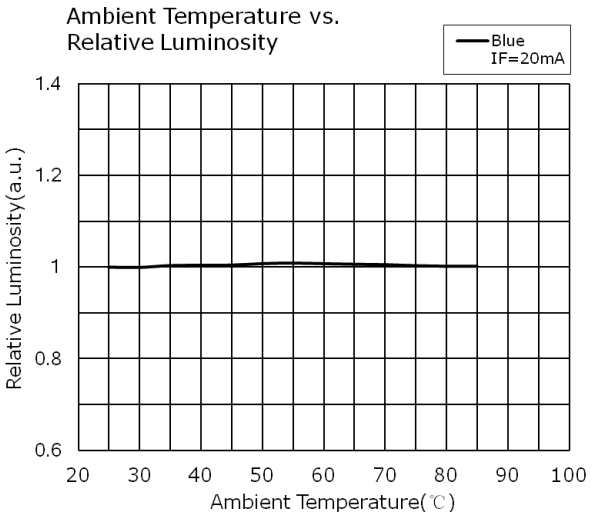


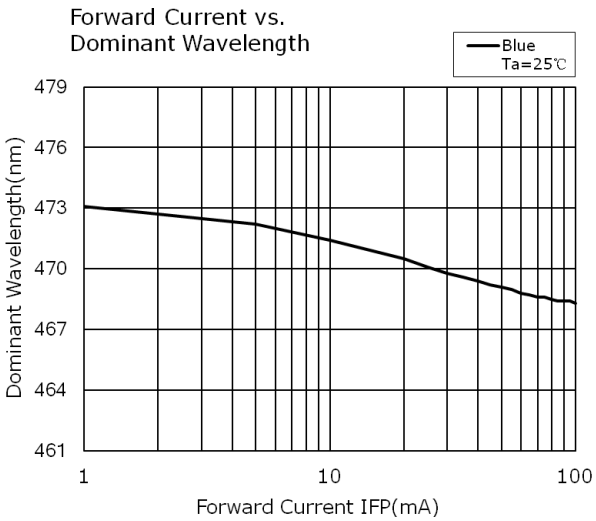


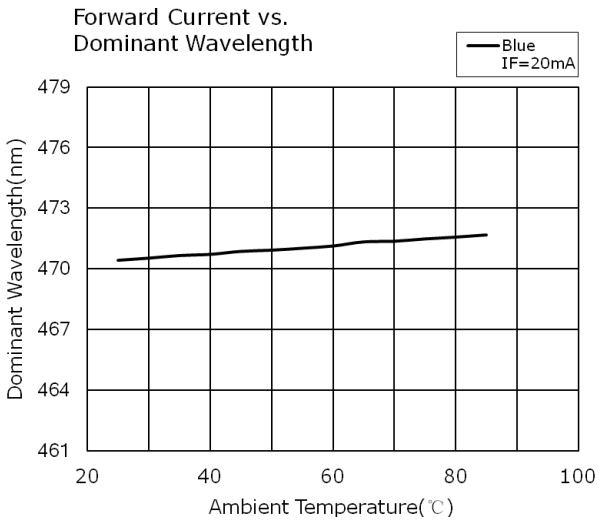

## 4. TYPICAL OPTICAL CHARACTERISTICS CURVES

All characteristics shown are for reference only and are not guaranteed.

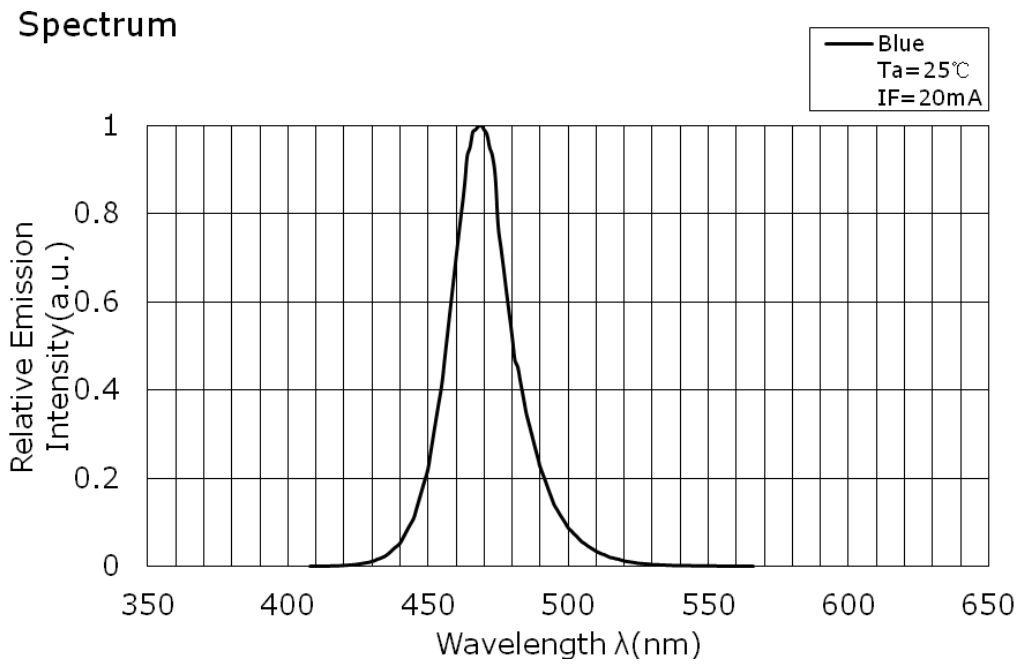


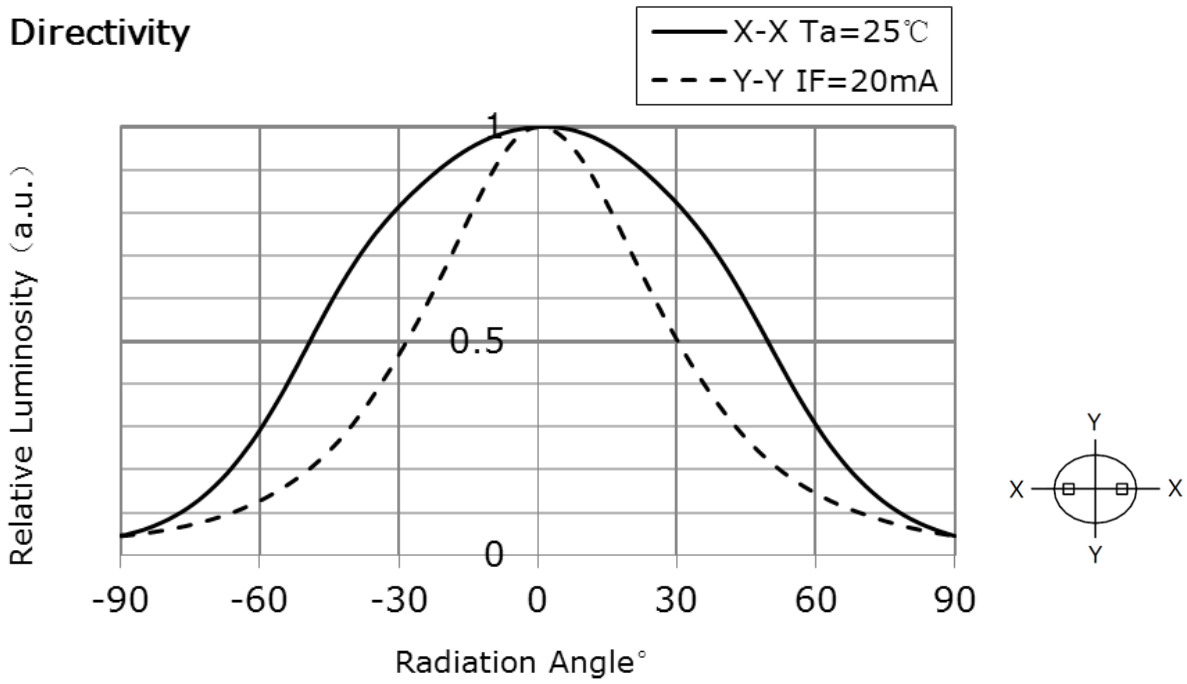

## 5. OUTLINE DIMENSIONS AND MATERIALS

This product complies with RoHS Directive. (Unit: mm, Tolerance: ±0.2)

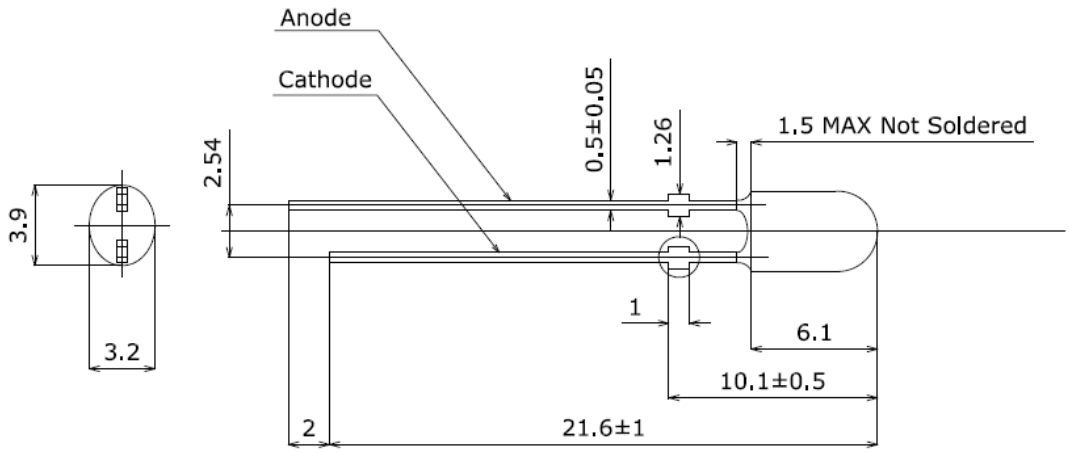


Lead Standoff

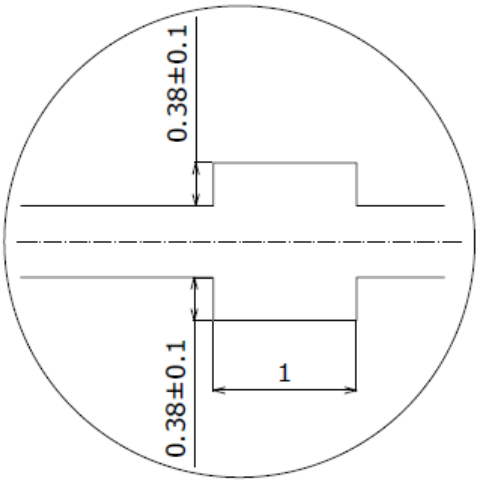


| Item | Description |
|---|---|
| Resin Materials | Epoxy Resin |
| Lens Color | Blue(with diffuser) |
| Lead Frame Materials | Ag-plated and lead-free Solder-plated Iron |

# 6. PACKING-BULK

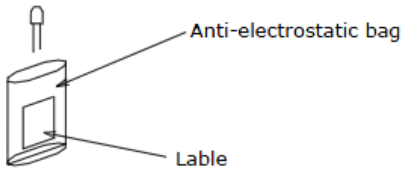


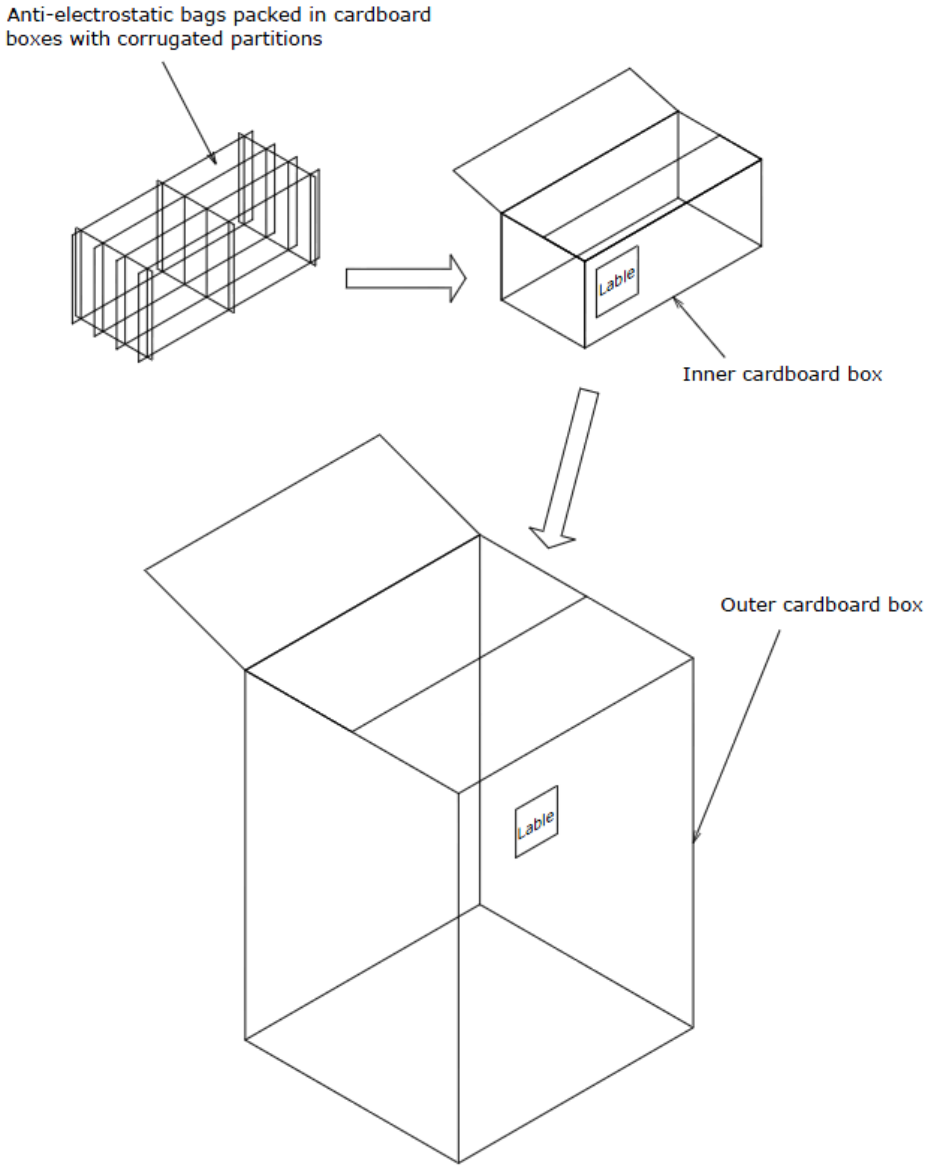


* The Label shows: TYPE, QTY, IV, VF, WLD.
* The Products are places loose in anti-static bags.
  The anti-static bags are packed in cardboard boxes to prevent damage during shipment.
* Do not drop the cardboard box or expose it to shock. If the box falls, the products could be damaged.
* The cardboard box is not water-resistant. Do not expose to water.

# 7. PACKING-(TAPING OUTLINE)

(Unit: mm)

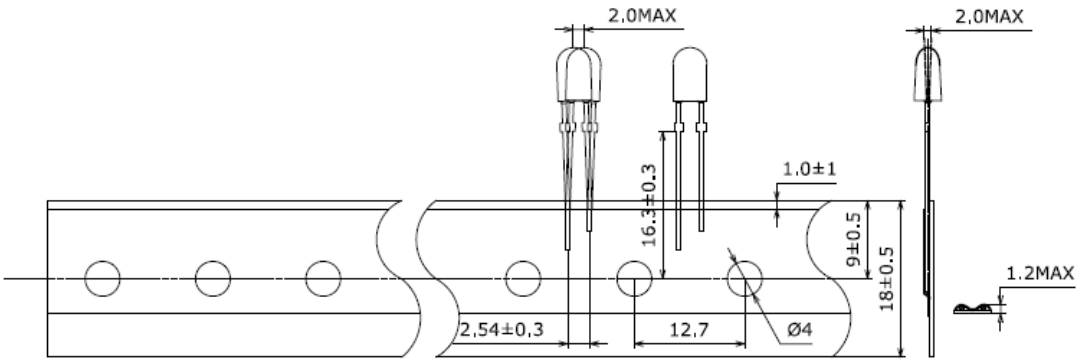


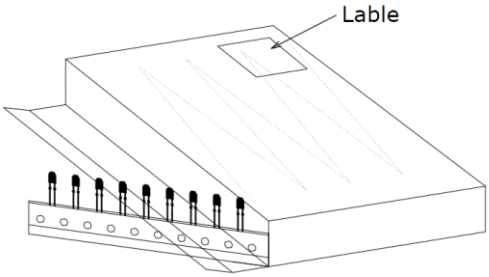


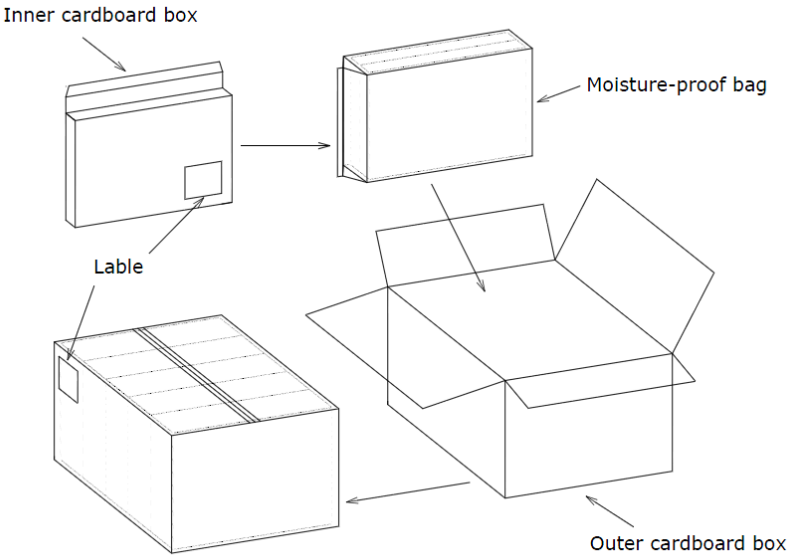


* The Label shows: TYPE, QTY, IV, VF, WLD.
* The Products are ammo packing in Inner cardboard box to prevent damage during shipment.
  The Inner cardboard boxes are packing in Moisture-proof bag.
* Do not drop the cardboard box or expose it to shock. If the box falls, the products could be damaged.
* The cardboard box is not water-resistant. Do not expose to water.

## 8. LEAD FORMING

- When forming leads, the leads should be bent at a point at least 3mm from the base of the epoxy bulb. Do not use the base of the lead frame as a fulcrum during lead forming.
- Lead forming should be done before soldering.
- Do not apply any bending stress to the base of the lead. The stress to the base may damage the LED's characteristics or it may break the LEDs.
- When mounting the LEDs onto a printed circuit board. The holes on the circuit board should be exactly aligned with the leads of the LEDs. If the LEDs are mounted with stress at the leads, it causes deterioration of the epoxy resin and this will degrade the LEDs.

## 9. STORAGE

- The LEDs should be stored at 30℃ or less and 60%RH or less after being shipped from Multi-Color and the storage life limits are 3 months. If the LEDs are stored for 3 months or more, they can be stored for a year in a sealed container with a nitrogen atmosphere and moisture absorbent material (silica gel desiccants).
- The lead part may be affected by environments which contain corrosive substances . Please avoid conditions which may cause the LED to corrode, tarnish or discolor. This corrosion or discoloration may cause difficulty during soldering operations. It is recommended that the LEDs be used as soon as possible.
- Please avoid rapid transitions in ambient temperature, especially in high humidity environments where condensation can occur.

## 10.STATIC ELECTRICITY

- Static electricity or surge voltage damages the LEDs.
  It is recommended that a wrist band or an anti-electrostatic glove be used when handing the LEDs.
- All devices equipment and machinery must be properly grounded. It is recommended that precautions be taken against surge voltage to the equipment that mounts the LEDs.